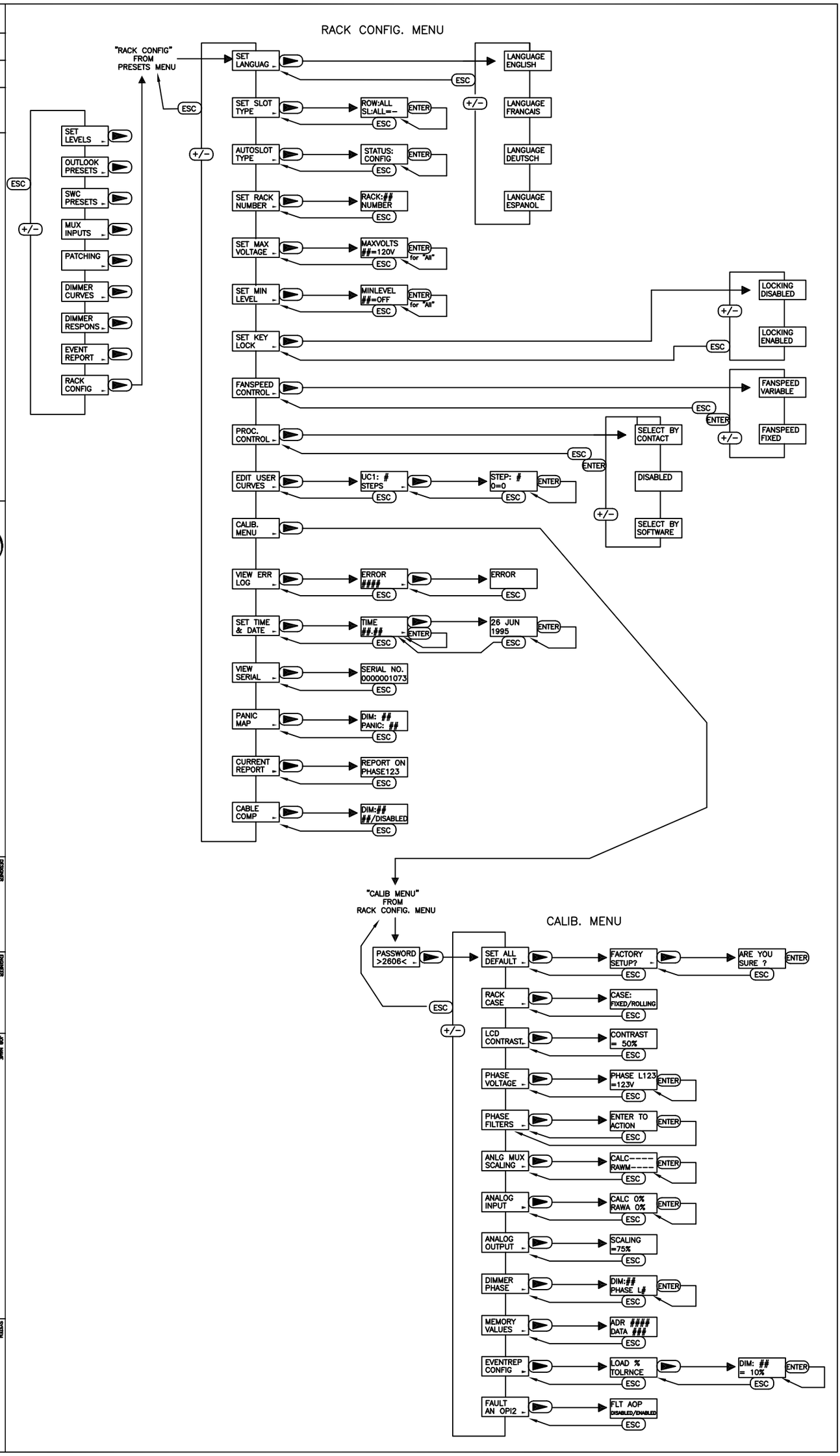

REV	DATE	REV DESCRIPTION	DWN	APPVD

Strand LIGHTING

18111 S. SANTA FE AVE., RANCHO DOMINGUEZ, CA 90221
MITCHELSTON INDUSTRIAL ESTATE, KIRKLAIDY, PTEL, KY1, 3LY.
2430 LUCKNOW DR., #15, MISSISSAUGA, ONT. CDN, L5S 1Y3

THIS DOCUMENT IS THE CONFIDENTIAL PROPERTY OF STRAND LIGHTING AND IS LOANED SUBJECT TO RETURN UPON DEMAND. TITLE TO THIS DOCUMENT IS NEVER SOLD OR TRANSFERRED. PURSUANT TO COPYRIGHT LAW, THIS DOCUMENT MAY NOT BE REPRODUCED, PUBLISHED OR DISCLOSED TO OTHERS WITHOUT WRITTEN LICENSE OR WRITTEN INSTRUCTIONS FROM STRAND LIGHTING. ALL RIGHTS TO DESIGNS AND INVENTIONS DISCLOSED HEREIN ARE RESERVED. BY RETAINING THE DOCUMENT IS ACCEPTED SUBJECT TO THE FOREGOING.

DESIGNER	DRAWN BY C. COLEY	DATE 01/02/01	ENGINEER
UNLESS OTHERWISE SPECIFIED DIMENSIONS ARE IN INCHES	APPVD BY		
TOLERANCES: AREA XXX ± .010			DO NOT SCALE DRAWING

SIZE	SCALE	SHEET
B	N.T.S.	1 of 1

JOB NAME

STRAND P/N

TITLE: CD-80 SV MENU FLOW CHART

SOFTWARE VERSION 3.73

SYSTEM: RACK CONFIG CALIBRATION MENUS

DRAWING NO. 105

REV